Micromanipulators

Micromanipulators are used when precision work is conducted under a microscope. A micropipette, electrode or probe can be mounted on a micromanipulator and move as little as a micron at a time. This tool can be used for *in vitro* fertilization, patch clamp experimentation, extracellular recording, microinjection and any application requiring fine mechanical placement (resolution). In addition to micromanipulators, WPI offers tilt bases, piezo translators and a variety of stands.

Micromanipulators can be broken out into three broad categories: Manual, Manual/Motorized and Motorized.

Micromanipulator	Manual or Motorized	Resolution	Travel	Stands	Tilt Base	Piezo Translator	Notes
SN-PZ-50	Motorized	0.5 µm resolution 30nm min. step					
SM325	Motorized	25nm/step 40,000 steps/rev	25mm (3 axes)	M9, M10, M10L, 501622, 501623	TBS, M-3		Use MCL3 Controller
DC3001*	Manual/ Motorized	Motor–0.5µm Manual–0.1mm	Motor–10mm (3 axes) Manual– X: 37mm Y, Z: 20mm	M9, M10, M10L, 501622, 501623	TBS	MPM10 MPM20 (with STM3 joystick)	Controller is required. Options: • MS314 (DC3314) • MPM10 • MPM20 with STM3 joystick
HS6-3	Manual/ Motorized	10nm/step	25mm (3 axes)				Use MCL3 Controller
M3301*	Manual	0.01mm (X fine) 0.1mm (X,Y, Z)	X(fine): 10mm X: 37mm Y: 20mm Z: 25mm	M9, M10, M10L, 501622, 501623	TBS, M-3	MPM20	
KITE	Manual	0.1mm	X(fine): 10mm X: 35mm Y,Z: 20mm	M9, M10, M10L, 501622, 501623	TBS, M-3		
M325	Manual	10µm	X: 25mm Y,Z: 10mm	M9, M10, M10L, 501622, 501623	TBS, M-3		
MMJ	Manual	0.1mm	X: 37mm Y: 20mm Z: 25mm	M9, M10, M10L, 501622, 501623	TBS, M-3		Joystick control
MD4	Manual	10µm (X fine) 100µm (X,Y, Z)	X(fine): 10mm X: 37mm Y: 20mm Z: 25mm	M9, M10, M10L, 501622, 501623	TBS, M-3		Holds two electrodes
HS6	Manual	5µm	25mm (3 axes)				
MM3-3	Manual (mini)	1.5µm	13mm				340g load
MM1-3	Manual (mini)	1.0µm	3mm				225g load

Smallest micromanipulator features full 20 mm of piezo-movement in all axes!

- ***Ultra-stable and precise electrode positioning***
- ***Smooth movement with minimal vibration***
- ***Penetration mode with high acceleration single steps***
- ***Back-flip mechanism for easy electrode exchange***
- ***Powered off in standby for zero noise interference***
- ***Ergonomic controller can operate up to 14 manipulators***

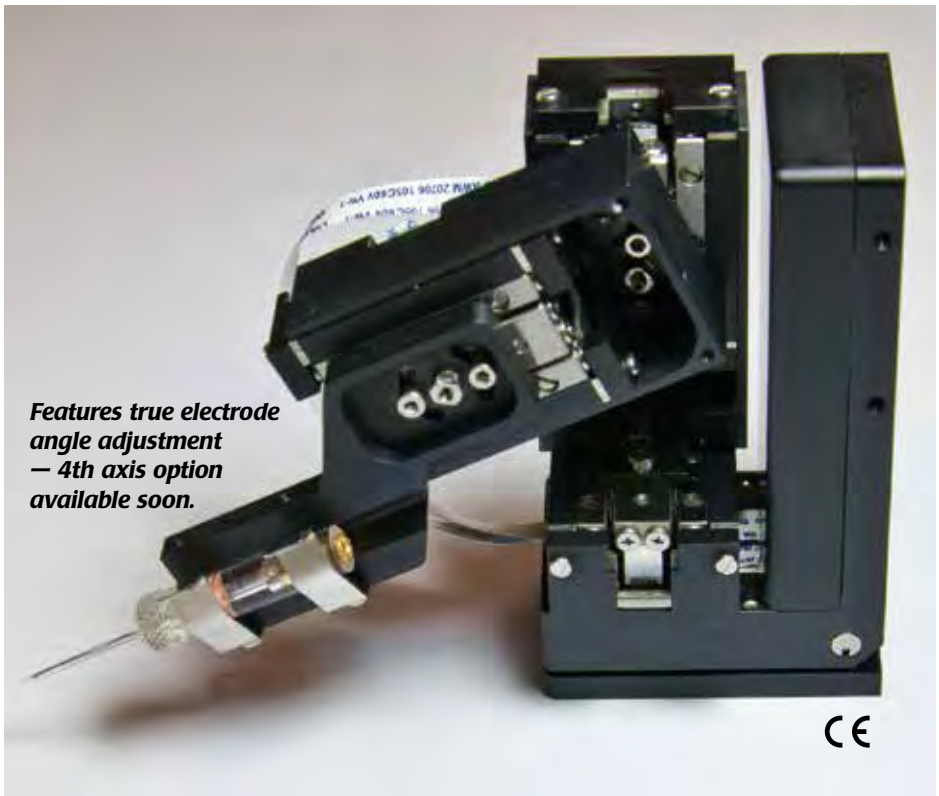

Features true electrode angle adjustment — 4th axis option available soon.

Battery-operated control unit with rotating knobs and information display. Push buttons allow easy speed adjustment and operation of memory positions. Double-curved profile provides good ergonomics and operation of rotating knobs without moving hand.

SN-PZ-50 SPECIFICATIONS

SN-PZ-50 MICROMANIPULATOR

POSITIONING RANGE	20x20x20 mm3 (x-y-z)
MINIMUM STEP SIZE	30 nm
CLOSED-LOOP CONTROL	0.5 µm resolution and 3 µm repeatibility for absolute position
MAXIMUM SPEED	~3 mm/s
MAXIMUM LOAD	200 g*
TABLE MOUNTING	magnet or bolt
ELECTRODE DRIVE ANGLE	0 - 35 deg
BACK-FLIP MECHANISM	
DIMENSIONS**	32x40x80 mm
WEIGHT**	260 g

SN-PCZ CONTROL UNIT

Backlit display	
Three rotary knobs with optical encoders	
Can operate up to 14 micromanipulators*	
Two memory positions for each micromanipulator	
DIMENSIONS	190 x 210 x 40 mm
WEIGHT	510 g
AC POWER	110-240 V; 50-60 Hz

**1-to-8 connector hubs available for connecting more than two manipulators*

**Load balancing options available for loads exceeding 50 g*
***Dimensions and weight without head-stage or electrode holder adapter; axis in initial positions*

SN-PCZ-50L	Miniature Piezo Micromanipulator (left-hand version) and Controller
SN-PCZ-50R	Miniature Piezo Micromanipulator (right-hand version) and Controller
SN-PZ-50L	Miniature Piezo Micromanipulator (left-hand version)
SN-PZ-50R	Miniature Piezo Micromanipulator (right-hand version)

Specify line voltage

Joystick controller also available.

Non-rotating Spindle Digital Micrometer Head

Build your own precision micro-positioning device

The new non-rotating spindle digital micrometer head allows you to create your own micro-positioning instrument. With micron-level accuracy, it gives higher precision than a normal micromanipulator. Since the spindle does not rotate as it advances, instruments can be directly attached without the need for a complicated decoupling device. The digital display eliminates the need to squint at the notational scale. Readings can be clearly seen in either inches or millimeters. You can read both absolute position and the increment relative to a previously chosen point.

502102 SPECIFICATIONS

Total Travel Distance	25 mm
Resolution	0.001 mm
Accuracy	± 0.003 mm
Spindle Diameter	∅ 8 mm
Mounting	∅ 12 mm x 10 mm
Total Length	166 mm
Measurement Mode	Absolute and incremental
Digital Readout	mm or inch
Analog Readout	mm
Data Output	RS232
Environmental Protection	IP54
Shipping Weight	0.51 kg (1.12 lb)

502102	Non-Rotating Spindle Micrometer Head

Universal Manipulator Stand

Vibration-free Platform (VFP) not included

Universal Micromanipulator Stands enable scientists to mount their manual and motorized micromanipulators at variable angles and heights. A solid aluminum platform with a grooved tower allows the user to attach any micromanipulator of any size or shape to the post for infinite flexibility. Once mounted, the micromanipulator can be set at any height along the entire length (30 cm or 45 cm). The platform base comes configured with industry standard pre-bored holes (1/4-20 x 1″ or M6 x 25 mm), allowing direct mounting to any type vibration-free table (for patch clamp recordings) or optical bench (for laser and optical measurements).

Using additional Rotation Clamps (one included with stand), two or more micromanipulators can be mounted on the stand simultaneously in a space-saving convenient manner. WPI's Universal Stand not only allows the user 360° flexibility in manipulations but also promotes independent angular transitions using a single feather-light tensioner/adjustment screw. This affordable stand is currently the *preferred* choice in micromanipulator stands — head and shoulders above set-ups using multiple magnetic-based stands costing hundreds more when combined with antiquated heavy steel base plates.

UMS SPECIFICATIONS

DIMENSIONS		
Base plate	10.0 x 12.5 x 1.5 cm (LxWxH)	
Stand	4.0 x 4.0 x 30 cm (LxWxH) (501622)	
	4.0 x 4.0 x 45 cm (LxWxH) (501623)	
Mounting holes	English 1/4 20 x 1″ (2 bolts supplied)	
	Matrix M6 x 25mm grid (2 bolts supplied)	
SHIPPING WEIGHT	501622	9 lbs (4 kg)
	501623	11 lbs (5 kg)

501622	Universal Micromanipulator Stand 30 cm high (includes one clamp)
501623	Universal Micromanipular Stand 45 cm high (includes one clamp)
501624	Optional Rotation Clamp
VFP	Vibration-Free Platform

Vibration-Free Workstation — see page 143

The **M3301**, **Kite** and **SM325** *(but not **M325**)* can be used with these mounts.

High speed penetration and precise control

The piezo-ceramic element in WPI's **MPM10** provides high penetration speed over an extremely short distance (0.5 to 10.0 µm). Because the range of travel of a dedicated piezomanipulator is much too limited for it to be useful independently, it must be mounted on a manipulator. The MPM-10 piezo translator combined with a **DC3001** motorized micro-manipulator (available separately) provides a single electronically controlled system.

When the piezo element is activated, the MPM-10 axis carrying the micropipette shoots forward at a rate which is set on the control panel, then immediately returns (at a slower speed) to its starting position. As soon as the piezo element begins its reverse travel, the motorized manipulator starts to travel forward. The complimentary opposition of these two travel sequences results in the micropipette tip remaining in its advanced absolute position.

The three axes of the DC3001 are controlled by six buttons. Pressing a button for less than 0.3 seconds activates one step, the size of which (0.5 to 10.0 micron) is set on the Step Size control. Pressing longer activates the continuous mode, at the rate set on the Motor Speed control. Pressing the button for the X axis forward direction activates the piezo mode. Advancement speed of the piezo element can be separately adjusted from 1 to 100 mm/sec.

Precise construction and special vibration stabilizers ensure the MPM-10's excellent puncture characteristics. Lateral deviation from the ideal axis of puncture (measured at the tip of the electrode holder) is ± 5% of the step size.

DC3001 micromanipulator and M-3 tilting base not included.

Includes controller, piezo translator, electrode holder, cables and mounting bracket. Shipping weight: 6 lb (2.7 kg).

SYS-MPM10	Piezo Controller for DC3001 Motorized Micromanipulator
PM5	Remote Controller for MPM-10
PM6	Replacement Electrode Holder for MPM10
14104	Record/Inject Electrode Holder for MPM10, MPM20
MPH8	Electrode Holder Adapter for MPM10 & MPM20
M-3	80° Tilting Base 6mm x 1mm screw (Shipping Weight: 2 lb)

Specify line voltage

Micromanipulator not included.

Piezo Translator

For use with M3301 and DC3001 micromanipulators

Especially recommended for use with the M3301 micromanipulator, the MPM20 is a very efficient tool for intracellular injection. High penetration speed and precise axial advance allows injection pipette to be brought to its target position with tremendous accuracy. Lateral escape of the cell is almost eliminated, and even tough membranes can be penetrated. Independently selectable reverse speed setting can be used for fast withdrawal, preventing adhesion of the injected cell to pipette tip. Mounts directly onto DC3001 and M3301 micromanipulators. **Use with DC3001 requires MS314 controller** (for the micromanipulator).

The combination of the MPM20, a micromanipulator, and the **PV820 PicoPump** (see page 180) constitutes an extremely efficient system for intracellular injection; cell penetration, injection and withdrawal are executed automatically with the press of a button.

Shipping weight: 10 lb (4.5 kg).

SYS-MPM20	Piezo Translator
PM7	Replacement Electrode Holder for MPM20
14106	Footswitch for MPM20

Specify line voltage

Programmable High Precision
Motorized Micromanipulator

suitable for patch clamp and IVF

WPI introduces a compact high precision motorized micromanipulator (SM325). It features low noise, high stability, a user-friendly software interface and economy that are major concerns in IVF and patch clamp research.

The SM325 is driven in all three axes through high resolution stepping motors, which can achieve 40,000 steps per revolution (25 nm/step) with completely vibration-free motion. In a normal lab environment, it can stay localized overnight without drifting. The 25mm long range of travel makes it unnecessary to have an additional manual coarse adjustment.

Its compact construction makes mounting onto the stage plate of a microscope practical. The x-axis can be tilted by 90° that allows for a better positioning of the injection tool. An additional tilting fixture makes it possible to tilt the tool holder for fast and easy cleaning and exchange of the injection tool.

The MCL3 controller features a dynamic micro-step function that makes very quick positioning possible with maximum accuracy. Motor control is achieved with a linear output amplifier, which also drastically reduces electronic noise. Users can control the micromanipulators by joystick, keyboard, mouse or computer. The user-friendly software program can be enabled to remember up to 999 position coordinates from previous procedures and can robotically repeat this same positioning sequence.

SM325 SPECIFICATIONS

CONTROL METHOD	Joystick, software, or both
TRAVEL DISTANCE	25 mm each axis
RESOLUTION	25 nm/step or 40,000 steps/rev
MAXIMUM SPEED	4 mm/second
POWER SUPPLY	120/240V, 50/60Hz
DIMENSIONS	
SM325-M	5x7x5.5 in. (13x18x14 cm) (WxLxH)
MCL3	9.8x9x3.7 in. (25x23x9.5 cm) (WxLxH)
SHIPPING WEIGHT	
SM325-M	6 lb. (2.7 kg)
MCL3	11 lb. (5 kg)

SM325	High Resolution 3-D Motorized Micromanipulator (SM325-M) & Controller (MCL3)
SM325-M	High Resolution 3-D Motorized Micromanipulator
MCL3	Controller with Joystick and software for SM325-M
OPTIONAL ACCESSORIES	
M3301EH	Replacement Electrode Holder, straight, 14cm
15873	Angled Electrode Holder, 13 cm long
501622	Universal Micromanipulator Stand, 30 cm high
501623	Universal Micromanipulator Stand, 45 cm high
VFP	Vibration-Free Platform

Vibration-Free Workstation — see page 143

Programmable Ultra High Precision Motorized Micromanipulators

M3301EH Electrode Holder included

MCL3-HS6

HS6-3

The HS6-3 is supplied with manual controls and stepper motor drives in all 3 axes. The extremely solid construction eliminates the vibrations and drifts. With the utmost precision and long travel distance in all three directions, HS6-3 is the ideal tool for patch-clamp or electrophysiological applications. The tilting device is mounted on the base plate serves as coarse height adjustment as well and the tool holder can be swiveled in all directions.

The MCL3 controller features a dynamic micro-step function that makes very quick positioning possible with maximum accuracy and free of vibration. Motor control is achieved with a linear output amplifier, which also drastically reduces electronic noise. Users can control the micromanipulators by joystick, keyboard, mouse or computer. The user-friendly software program can be enabled to remember up to 999 position coordinates from previous procedure and can robotically repeat this same positioning sequence.

HS6-3 SPECIFICATIONS

CONTROL METHOD:	Joystick, software, or both
TRAVEL (X-Y-Z):	25 mm
RESOLUTION:	10 nm/step
MAXIMUM SPEED:	4.5 mm/sec.
STABILITY:	1 nm/hour at 24°C
POWER SUPPLY:	120/240 V, 50/60 Hz
DIMENSIONS:	
HS6-3:	6.1x9.7x9.9 in (15.5x24.6x25 cm) (WxLxH)
MCL3:	9.8x9x3.7 in (25x23x9.5 cm) (WxLxH)
WEIGHT:	
HS6-3:	13.2 lb. (6kg)
MCL3:	7.7 lb. (3.5kg)

HS6-3	High Resolution Motorized HS6 Micromanipulator and Controller *includes HS6-3M and MCL3*
HS6-3M	High Resolution Motorized HS6 Micromanipulator
MCL3	Controller with Joystick and software for HS6-3M
OPTIONAL ACCESSORIES	
M3301EH	Replacement Electrode Holder, straight, 14cm
15873	Angled Electrode Holder, 13 cm long
501622	Universal Micromanipulator Stand, 30 cm high
501623	Universal Micromanipulator Stand, 45 cm high
VFP	Vibration-Free Platform

Vibration-Free Workstation — see page 143

DC3001

The **DC3001** is the popular, high-precision manual/motorized micromanipulator. With 0.5µm resolution, it can be used with an optional joystick or an **MS314** controller. (With the controller, it is sold as **SYS-DC3314**.) It can be mounted on the **TBS** tilt base but is too heavy for the M-3 tilt base. When performing intracellular microinjection, the DC3001 can be used with the **MPM10** or **MPM20** piezo translators.

Manual coarse controls use cross roller bearing slides. Vernier scales allow readings to 0.1 mm. All controls are closely grouped so adjustments can be made in any plane with minimum effort. The DC3001 features DC motor drives and fine control micrometers in all three axes. Left- or right-handed versions of the DC3001 are supplied with a standard 12 mm clamp. Standard accessories provided include one microelectrode holder and a securing bolt and wrench.

The sophisticated MS314 Controller allows control of all three axes. Movements may be continuous through the use of cross switches, or the controller can cause the DC3001 to step in defined increments. Steps as small as 0.5 µm are possible. A popular joystick controller, STM3, allows control of the X, Y and Z axes.

If the **MPM10** piezo system is used, *it replaces the MS314 controller*. This configuration moves the motor forward as the piezo retracts, keeping the micropipette in the penetrated cell. When using the **MPM20**, the MS314 is necessary as the DC3001 motor controller because the MPM20 controls only the piezo element. The MS314 and MPM20 do not interact with each other.

TBS Tilt Base not included

15873 Electrode Holder not included

MS314 Controller

STM3 Controller *(available separately)*➡

SYS-DC3314R	Manipulator (right-handed) & MS314 Controller
SYS-DC3314L	Manipulator (left-handed) & MS314 Controller

Specify line voltage.

System components also available separately:

DC3001R	Motorized Manipulator, right-handed
DC3001L	Motorized Manipulator, left-handed
SYS-MS314	Controller for DC3001
STM3	Joystick Controller for DC3001
OPTIONAL ACCESSORIES	
TBS	Tilt Base with Screw Adjustment
PM5	Remote controller for MS314 and MPM-10
5464	5-lb Weight for Tilting Base (shipping weight: 7 lb [3 kg])
M4C	Microscope Stage Adapter
M3301EH	Replacement Electrode Holder (14 cm long)
15873	Angled Electrode Holder (13 cm long)
501607	Cable for MS314 and DC3001

DC3001 SPECIFICATIONS

	TRAVEL RANGE	RESOLUTION	
MANUAL:	X-axis 37 mm	0.1 mm	
	Y-axis 20 mm	0.1 mm	
	Z-axis 20 mm	0.1 mm	
	TRAVEL RANGE	RESOLUTION	MAXIMUM SPEED
MOTORIZED:	X-axis 10 mm	0.5 µm	0.2 mm/sec
	Y-axis 10 mm	0.5 µm	0.2 mm/sec
	Z-axis 10 mm	0.5 µm	0.2 mm/sec
SHIPPING WEIGHT:			
	DC3001:	3 lbs (1.4 kg)	
	MS314:	1.8 lbs (0.9 kg)	
	STM3:	2.8 lbs (1.3 kg)	

Miniature Micropositioners

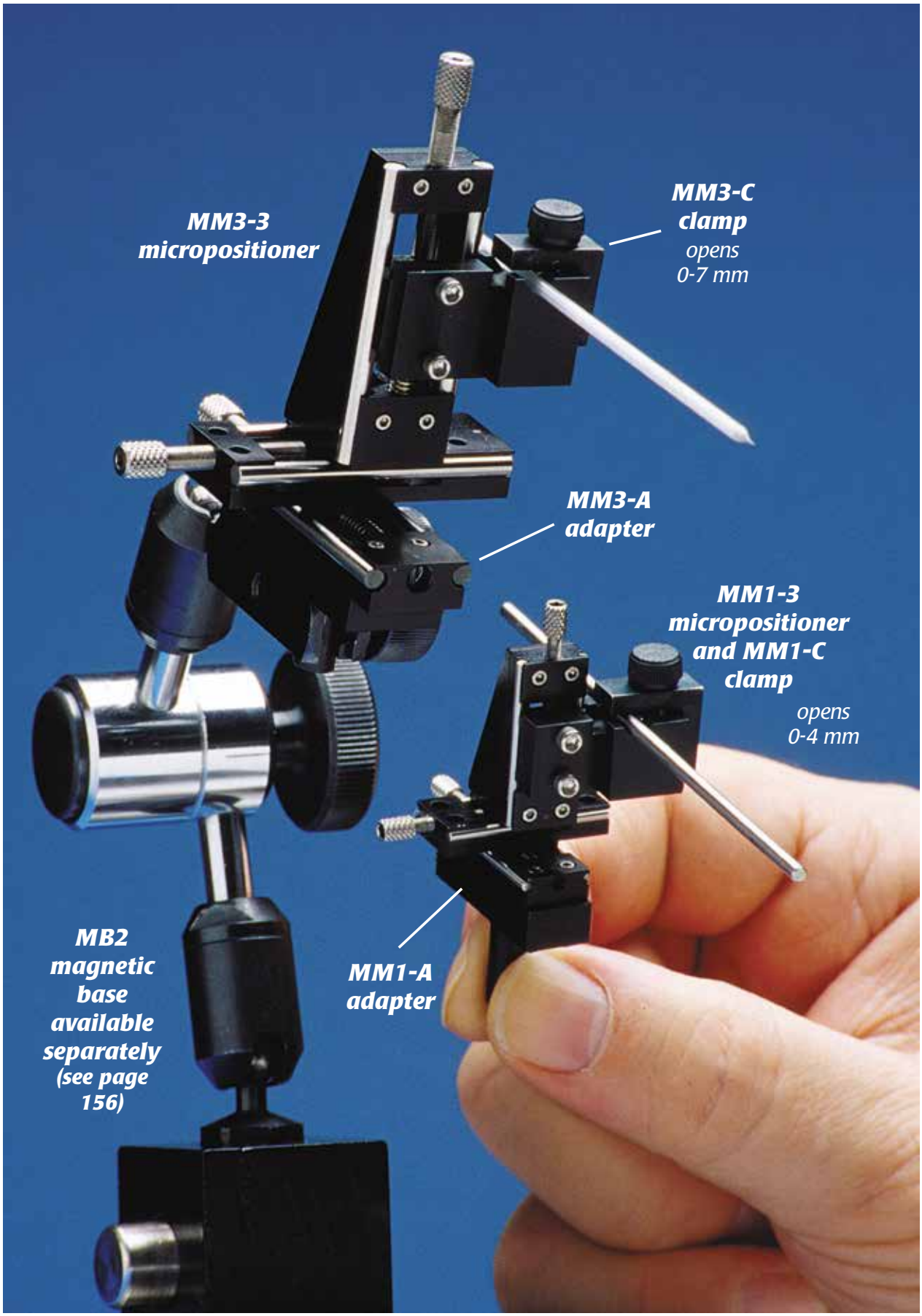

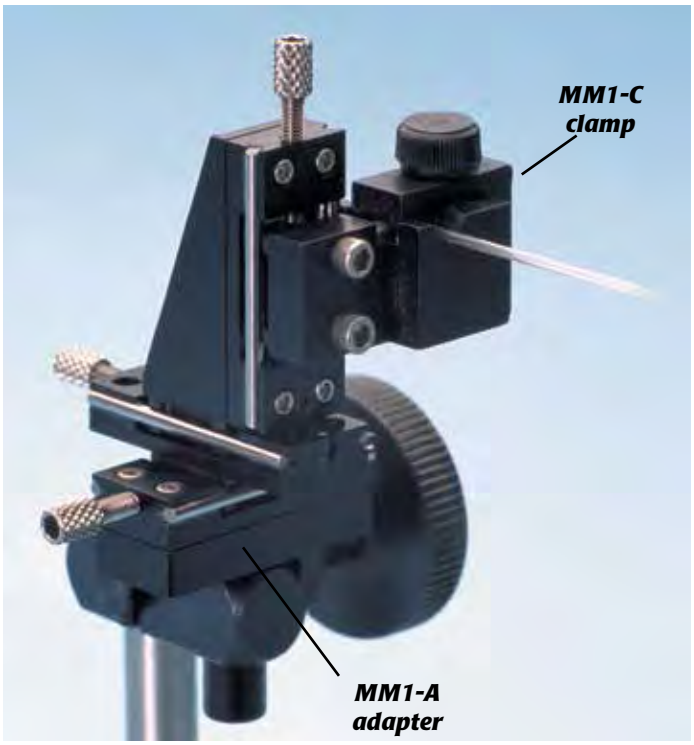

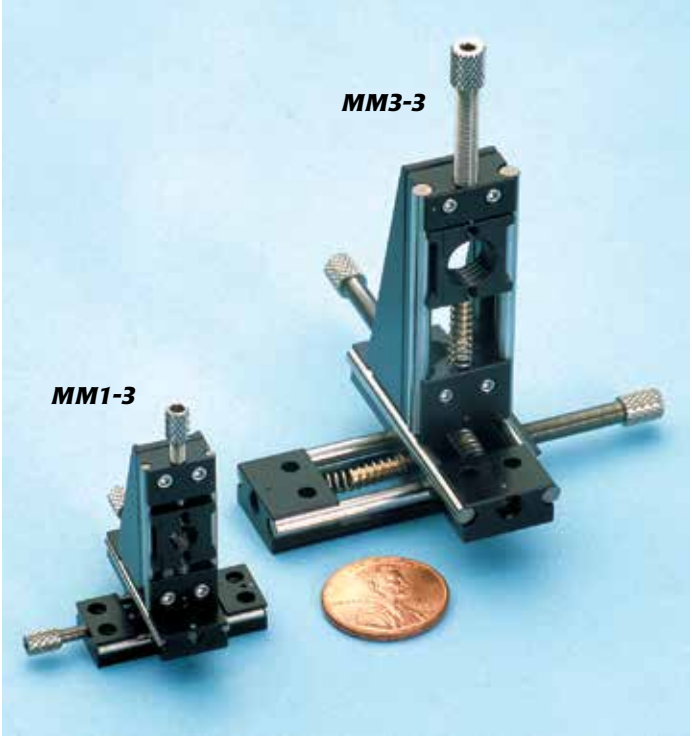

Mini Micropositioner (MM1 and MM1-3)

Single stage measures only 5 × 11 × 26 mm with 3 mm travel. Provides precise and smooth motion with no backlash, positive spring loaded carriage, straight within 1 micron and less than 1 micron maximum wobble. Features fine 80 TPI screw adjustment. 10 mm square mounting surface has a 3.9 mm tapped center hole for transmission and/or mounting. Available in single X (MM1), X-Y, and X-Y-Z (MM1-3) axis configurations.

Micropositioner (MM3 and MM3-3)

Single stage measures only 7 × 17 × 44 mm with 13 mm travel. Offers precise and smooth motion with no backlash, positive spring-loaded carriage, straight within 1.5 microns, and less than 1.5 microns maximum wobble. Features fine 80 TPI screw adjustment. 13 mm square mounting surface has a 7 mm tapped center hole for transmission and/or mounting. Available in single X (MM3), X-Y, X-Y-Z (MM3-3) axis configurations.

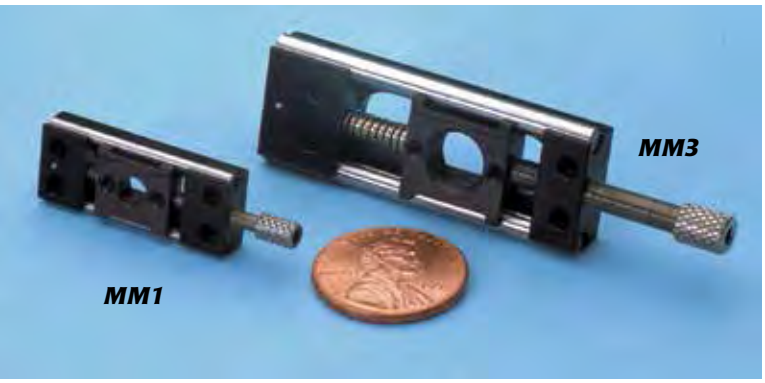

MINI-MICROPOSITIONER SPECIFICATIONS

	MM1	MM1-3	MM3	MM3-3
AXIS	X	X-Y-Z	X	X-Y-Z
STRAIGHT LINE ACCURACY	Within 1 micron over 3 mm travel	Within 1 micron over 3 mm travel	Within 1.5 micron over 13 mm travel	Within 1.5 micron over 13 mm travel
CLEAR APERTURE	3.9 mm tapped hole, 8-32 thread	3.9 mm tapped hole, 8-32 thread	7 mm tapped hole, 5/16-16 thread	7 mm tapped hole, 5/16-16 thread
LOAD CAPACITY	255 g Normal	255 g Normal	340 g Normal	340 g Normal
FINISH	Black Anodized	Black Anodized	Black Anodized	Black Anodized
WEIGHT	3 grams/axis	12 grams/axis	14 grams/axis	48 grams/axis
TYPE	Fine Screw	Fine Screw	Fine Screw	Fine Screw
TRAVEL	3 mm	3 mm	13 mm	13 mm

MM1	Mini Micropositioner, one axis, 3 mm travel
MM1-3	Mini Micropositioner, three axes, 3 mm travel
MM1-A	Mounting Adapter for MM1 and MM1-3
MM1-C	Clamp for MM1 and MM1-3
MM3	Micropositioner, one axis, 13 mm travel
MM3-3	Micropositioner, three axes, 13 mm travel
MM3-A	Mounting Adapter for MM3 and MM3-3
MM3-C	Clamp for MM3 and MM3-3
MM3-ALL	Complete 3-Axis Micropositioner & Magnetic Stand
MM1-ALL	Complete 3-Axis Mini Micropositioner & Magnetic Stand

Vernier scales allow readings to 0.1 mm. X-axis fine control allows readings to 10 µm.

Left- or right-handed versions of the KITE micromanipulator are supplied with a standard **12 mm clamp** and **electrode holder M3301EH**.

KITE-R	Kite Manual Manipulator (right-handed)
KITE-L	Kite Manual Manipulator (left-handed)
KITE-M3-R	Kite (right-handed) + Tilting Base Combo
KITE-M3-L	Kite (left-handed) + Tilting Base Combo

KITE SPECIFICATIONS

	TRAVEL RANGE	RESOLUTION
X-axis Fine	10 mm	0.01 mm
X-axis	35 mm	0.1 mm
Y-axis	20 mm	0.1 mm
Z-axis	20 mm	0.1 mm
SHIPPING WEIGHT	3 lbs (1.4 kg)	

OPTIONAL ACCESSORIES

M3301EH	Replacement Electrode Holder (14 cm long)
15873	Optional Angled Electrode Holder (13 cm long)
M-3	80° Tilting Base M6 x 1mm screw
5464	5-lb Weight for Tilting Base *Shipping weight: 7 lb (3 kg)*
500475	Ball Joint, 7 cm long, for ∅ 8 mm Holder
500476	Ball Joint, 4 cm long, for ∅ 4 mm Holder
M4C	Microscope Stage Adapter

Also see magnetic stands.

M3301 Manual Micromanipulator

The world's most widely used micromanipulator

Weighing just 550 grams and employing a slim space-saving design, this well-built micromanipulator outsells all others worldwide for high precision experiments where magnification is in the range of up to 250×. Its design allows units to stand tightly grouped — since all control knobs project to the rear. And because control knobs are clustered within an 8 cm area in a single vertical plane, resolution is quick — the hand works blindly while the eye monitors the microscopic image. Vernier scales allow readings to 0.1 mm; x-axis fine control allows readings to 10 microns.

The instrument employs rack-and-pinion drive, V-shaped guideways, and cross roller bearings, so all movement is sure and repeatable, without drift, sideplay, backlash, or sticking. Contact parts are milled of hardened steel for high performance and long life.

Left- or right-handed versions of the M3301 are supplied with a **standard 12 mm clamp (M2)** and **one microelectrode holder (M3301EH)**.

15873 Electrode Holder not included

Shown on optional M-3 Tilting Base with optional 5-lb Weight #5464

M3301R	Manual Manipulator, right-handed
M3301L	Manual Manipulator, left-handed
M3301-M3-R	Manual Manipulator (right handed) & Tilting Base
M3301-M3-L	Manual Manipulator (left handed) & Tilting Base
502105	Axis Adjustment Tool

M3301 SPECIFICATIONS

	TRAVEL RANGE	RESOLUTION
X-axis Fine	10 mm	0.01 mm
X-axis	37 mm	0.1 mm
Y-axis	20 mm	0.1 mm
Z-axis	25 mm	0.1 mm
SHIPPING WEIGHT	3 lbs (1.4 kg)	

Here's a new angle:

Ball-joint holder attachment

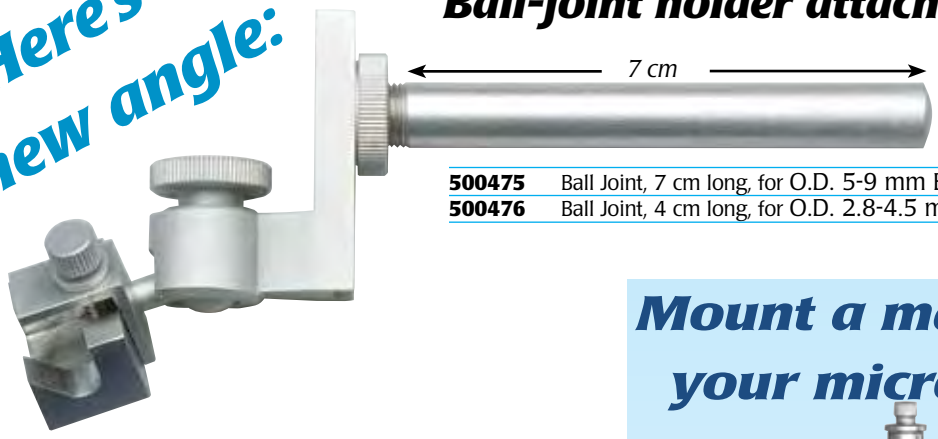

500475	Ball Joint, 7 cm long, for O.D. 5-9 mm Electrode Holder *(shown)*
500476	Ball Joint, 4 cm long, for O.D. 2.8-4.5 mm Electrode Holder

Mount a manipulator on your microscope stage

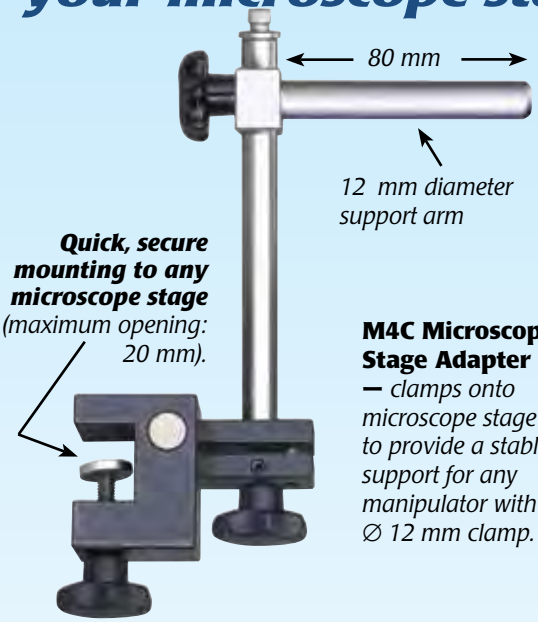

M4C	Microscope Stage Adapter

Interchangeable clamps allow manipulators to be mounted on a variety of supports.

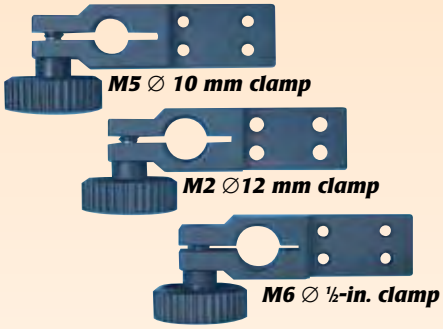

CE

M2	∅ 12 mm Clamp
M5	∅ 10 mm Clamp
M6	∅ 1/2-in. Clamp

At last — a tilt base you can operate with *one hand!*

High Precision, High Stability

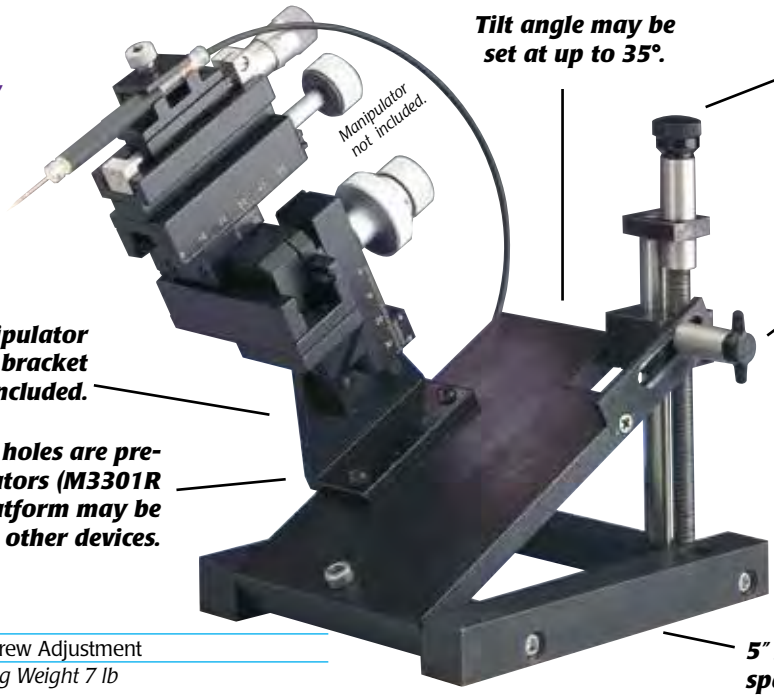

Tilt angle may be set at up to 35°.

Adjust tilt angle easily by simply turning knob of threaded shaft.

Tighten locking screw to lock platform angle.

Manipulator mounting bracket included.

Two sets of mounting holes are pre-drilled for WPI manipulators (M3301R shown) but steel platform may be drilled for mounting other devices.

3.5-pound steel base provides additional stability for your micromanipulator. Holes also allow permanent mounting to your benchtop.

5″ x 6″ footprint saves space in your work area.

TBS	Tilt Base with Screw Adjustment *Shipping Weight 7 lb*

High Resolution Manual Micromanipulators

HS6 Micromanipulator

Rock-solid — superb resolution

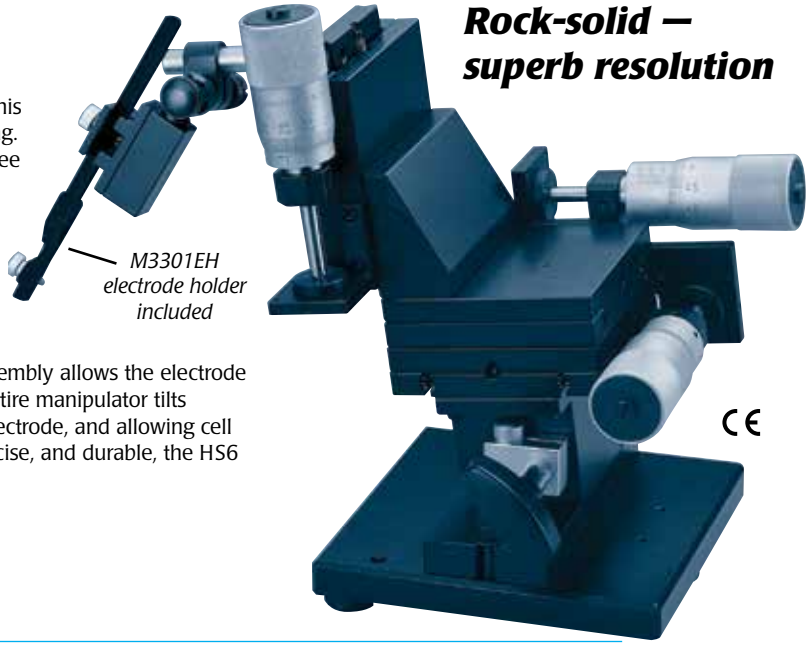

Engineered for stability, and built on a twelve-pound steel plate, this instrument is chosen worldwide for high resolution micro-recording. such as patch clamping, and other research requiring solid, drift-free performance. A superior tool in its own right, HS6 serves equally well as a base for other precision microdrives. HS6 can be bolted directly to a lab fixture or vibration-free platform. Resolution is extremely high — each graduation on its large micrometer barrels indicates just 5 micron movements. Rack and pinion drive, V-shaped guideways, and cross roller bearings give sure, repeatable movements without sideplay, slipping, or sticking. All contact parts are milled of hardened steel. A flexible ball-joint assembly allows the electrode to be positioned at any angle relative to the x, y, or z axis. The entire manipulator tilts forward to 25 degrees allowing rapid coarse adjustment of the electrode, and allowing cell penetration along the axis of any of the micrometers. Simple, precise, and durable, the HS6 will provide years of dependable performance.

HS6 SPECIFICATIONS

	TRAVEL RANGE	RESOLUTION
X-axis	25 mm	5 µm
Y-axis	25 mm	5 µm
Z-axis	25 mm	5 µm
SHIPPING WEIGHT	25 lbs (11 kg)	
DIMENSIONS	9.9 x 6.6 x 9.9 in. (H x W x L)	

SYS-HS6	Micromanipulator
M3301EH	Replacement Electrode Holder (14 cm x ∅ 7.2 mm)
15873	Optional Angled Electrode Holder (13 cm long)
VFP	Vibration-Free Platform

Vibration-Free Workstation — see page 143

Joystick-Controlled Micromanipulator

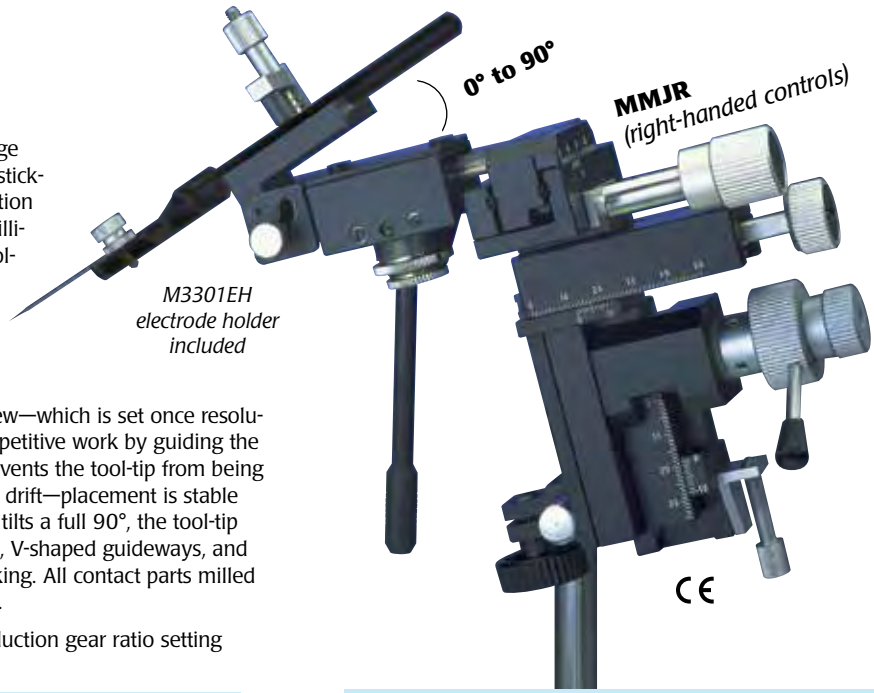

Specially adapted for use with the **Nanoliter Injector** (page 186) for oocyte injection and similar applications, this joystick-controlled micromanipulator allows an easy "steering" motion that translates normal hand movement into smooth submillimeter shifts. Viewed microscopically, movement of the tool-tip corresponds naturally to hand movement, so accurate resolution is intuitive and quick. All fine adjustment can be controlled by the joystick. Pivoting forward, backward, or laterally gives precise x-y adjustment. For added convenience, a separate coarse control lever is also provided for quick raising and lowering. A stop screw—which is set once resolution is achieved—eliminates refocusing and streamlines repetitive work by guiding the tip to its previous focussing plane. The stop screw also prevents the tool-tip from being broken during sudden lowering and eliminates downward drift—placement is stable enough for even extended use. Because the probe holder tilts a full 90°, the tool-tip pivots easily for precise positioning. Rack-and-pinion drive, V-shaped guideways, and cross roller bearings eliminate backlash, slipping, and sticking. All contact parts milled from hardened steel for precise performance and long life.

Joystick travel: 0.35 mm to 3.5-mm, depending on reduction gear ratio setting (adjustable between 1:15 and 1:150).

MMJR	Joystick Micromanipulator (Right-Handed)
MMJL	Joystick Micromanipulator (Left-Handed)

OPTIONAL ACCESSORIES

M3301EH	Replacement Electrode Holder (14 cm × ∅ 7.2 mm)
15873	Angled Electrode Holder (13 cm long)
M4C	Microscope Stage Adapter
500475	Ball Joint, 7 cm long, for ∅ 8 mm Holder
500476	Ball Joint, 4 cm long, for ∅ 4 mm Holder

Also see magnetic stands.

MMJ SPECIFICATIONS

	TRAVEL RANGE	RESOLUTION
X-axis	37 mm	0.1 mm
Y-axis	20 mm	0.1 mm
Z-axis	25 mm	0.1mm
JOYSTICK (X,Y axis)	0.35~3.5 mm	
SHIPPING WEIGHT	4 lbs (1.8 kg)	

Micrometer Slide Micromanipulator

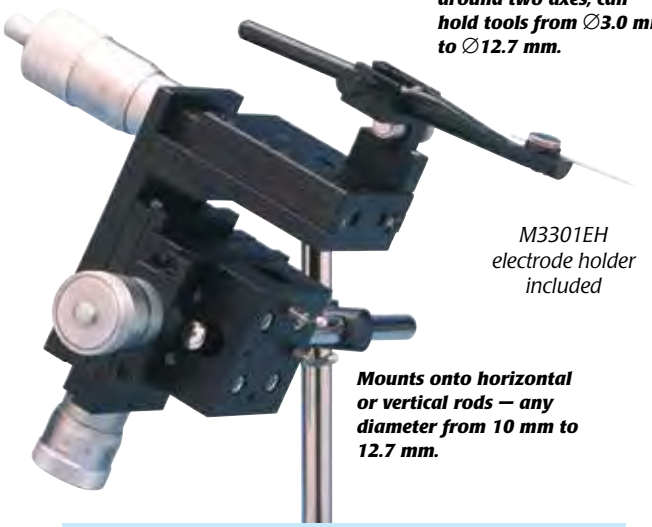

The **M325** three-axis manual micromanipulator is built of precision micrometer-actuated linear slides. Each slide is comprised of a large micrometer head and a spring-return linear slide. The micromanipulator has been carefully designed to minimize wear in the moving components to achieve a long operational life without the necessity for frequent maintenance or adjustment. The micrometer head is graduated in 10 micron steps which enable repeatable positioning to an accuracy of ± 2 microns.

A unique spring return mechanism is used to transmit movement of the micrometer spindle to the slide carriage — eliminating backlash, lost motion and reducing thread wear. Each linear slide utilizes ball bearings which enable the M325 to carry loads of up to 1 kg.

The toolholder can clamp onto tools with shaft diameters of 3.0 mm to 12.7 mm and allows rotation around two axes. This provides a wide range of options for incorporating the manipulator into your workstations. The M325 can also be configured very easily in left- or right-handed versions to allow several units to be positioned in close proximity.

A quick-release clamp allows easy mounting onto any rod from 10-mm to 12.7 mm diameter.

M325	3-Axis Fine Controlled Manual Micromanipulator

OPTIONS AND ACCESSORIES

M3301EH	Replacement Electrode Holder (14 cm long)
15873	Optional Angled Electrode Holder (13 cm long)
500475	Ball Joint, 7 cm long, for ∅ 8 mm Holder
500476	Ball Joint, 4 cm long, for ∅ 4 mm Holder

Also see magnetic stands.

M325 SPECIFICATIONS

	TRAVEL RANGE	RESOLUTION
X-axis	25 mm	10 µm
Y-axis	10 mm	10 µm
Z-axis	10 mm	10 µm
SHIPPING WEIGHT	4 lbs (1.8 kg)	

Dual Tool-Holder Micromanipulator

A small and compact micromanipulator for manual manipulation in all three axes (x, y and z), the MD4 is equipped with a mounting bracket for a second tool or electrode holder which can be positioned in the x and y axes independent of the manipulator and may also be tilted and swiveled by two fine-adjust screws. Scales allow readings of coarse adjustment with an accuracy of 100 µm. Additional x-axis fine control is achieved with a micrometer screw with a resolution of 10 µm. Supplied with one M3301EH electrode holder and a 12 mm clamp for mounting on M10 Stand or other 12 mm supports. May also be mounted on optional M-3 Tilting Base.

Travel, standard electrode: x-axis, 37 mm (fine, 10 mm); y-axis, 20 mm; z-axis, 25 mm. Additional electrode: x-axis, 7 mm; y-axis, 10 mm.

MD4R	Double-Holder Micromanipulator (right)
MD4L	Double-Holder Micromanipulator (left)
MD4-M3-R	Double-Holder Micromanipulator (right) + Tilting Base
MD4-M3-L	Double-Holder Micromanipulator (left) + Tilting Base

OPTIONAL ACCESSORIES

M3301EH	Replacement Electrode Holder (14 cm long)
15873	Optional Angled Electrode Holder (13 cm long)
M2	Additional ∅ 12 mm Clamp
M-3	80° Tilting Base 6mm x 1mm screw
M4C	Microscope Stage Adapter
M5	Additional ∅ 10 mm Clamp
M6	Additional ∅ 1/2-in. Clamp
5464	5-lb Weight for Tilting Base*
500475	Ball Joint, 7 cm long, for ∅ 8 mm Holder
500476	Ball Joint, 4 cm long, for ∅ 4 mm Holder

**Shipping weight: 8 lb (3.6 kg)*

Also see magnetic stands.

Also see Universal Manipulator Stands.

MD4 SPECIFICATIONS

	TRAVEL RANGE	RESOLUTION
X-axis Fine	10 mm	10 µm
X-axis	37 mm	100 µm
Y-axis	20 mm	100 µm
Z-axis	25 mm	100 µm
SHIPPING WEIGHT	3 lbs (1.4 kg)	

Magnetic Holding Devices

Useful as a probe holder, the M11 is not suitable for heavier items such as micromanipulators.

M9

Mechanical clamp tightens three rotatable joints simultaneously with one locking knob. Arm adjusts without distortion. Base exerts a magnetic force of 100 kilos for greatest stability. Equipped with fine adjustment for precise operations.

Magnetic Base:
50 (w) x 60 (l) x 55 (h) mm
(2.2 x 2.4 x 2.2 in.)

Vertical Holding Power:
100 kgf (220 lb force)

Arms:
L1: 119 mm (4.7 in.)
L2: 106 mm (4.2 in.)
L3: 25 mm (0.98 in.)
Ø 12 mm (0.472 in.)

Clamp Hole:
none

Weight:
1.8 kg (4 lb)

M9 Magnetic Stand

M10

Similar to M1 but with a 12 mm diameter sub pole (fits 12 mm clamp supplied with M3301, DC3001, MD4 and MMJ manipulators).

Magnetic Base:
50 (w) x 58 (l) x 55 (h) mm
(2.0 x 2.3 x 2.2 in.)

Vertical Holding Power:
80 kgf (176 lb force)

Main Pole:
diameter: 14 mm (0.55 in.)
length: 178 mm (7 in.)

Sub Pole:
diameter: 12 mm (0.47 in.)
length: 165 mm (6.5 in.)

Clamp Hole:
Adjustable from 4.5 mm to 6.5 mm

Weight:
1.8 kg (4 lb)

M10 Magnetic Stand

M10L

Same as M10 but equipped with a taller (14-inch) vertical main pole.

Magnetic Base:
50 (w) x 58 (l) x 55 (h) mm
(2.0 x 2.3 x 2.2 in.)

Vertical Holding Power:
80 kgf (176 lb force)

Main Pole:
diameter: 14 mm (0.55 in.)
length: 356 mm (14 in.)

Sub Pole:
diameter: 12 mm (0.47 in.)
length: 165 mm (6.5 in.)

Clamp Hole:
Adjustable from 4.5 mm to 6.5 mm

Weight:
1.8 kg (4 lb)

M10L Magnetic Stand

M11

Bends freely for maximum flexibility. The connecting arm twists and bends like a snake. Lock the arm in position with a flick of the controlling lever.

Magnetic Base:
50 (w) x 58 (l) x 55 (h) mm
(2.0 x 2.3 x 2.2 in.)

Vertical Holding Power:
80 kgf (176 lb force)

Main Pole:
diameter: 16 mm (0.63 in.)
length: 315 mm (12.4 in.)

Sub Pole:
none

Clamp Hole:
Adjustable from 6 mm to 8 mm

Weight:
1.4 kg (3 lb)

M11 Magnetic Stand

Powerful Ball Joint Rare Earth Magnet

Use in constructing your own holding device for small parts/equipment

- Small but very powerful: holds 2 kilograms (~5 pounds)!
- Steel ball rotates freely 360° on a 180° axis
- M3 mounting screw on ball for attachment to equipment

- Magnet base threaded (M3) for mounting onto a base or equipment

This novel magnetic ball joint has phenomenal holding power for up to 2 kg of attached weight while permitting the ball a full 360° rotation on a 180° axis. You can freely orient your equipment to an infinite number of positions within this rotation. This is made possible by the combination of a steel ball (10 mm diameter) and a powerful rare earth magnet contained in the magnet cylinder (ϕ 10 x 20mm). Convenient M3 attachment sites are provided on both the ball (male) and the magnet base (female).

For use with micromanipulators for the positioning and holding of optical instruments including various lighting sources and lasers, pipettes and any small parts that would benefit from the flexibility offered by this new magnetic ball joint.

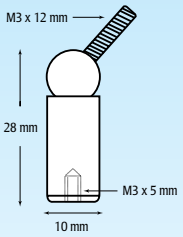

500871 Magnetic Ball Joint

The base of each stand exerts a powerful magnetic force that holds it solidly on ferrous metal surfaces — even vertically or upside-down

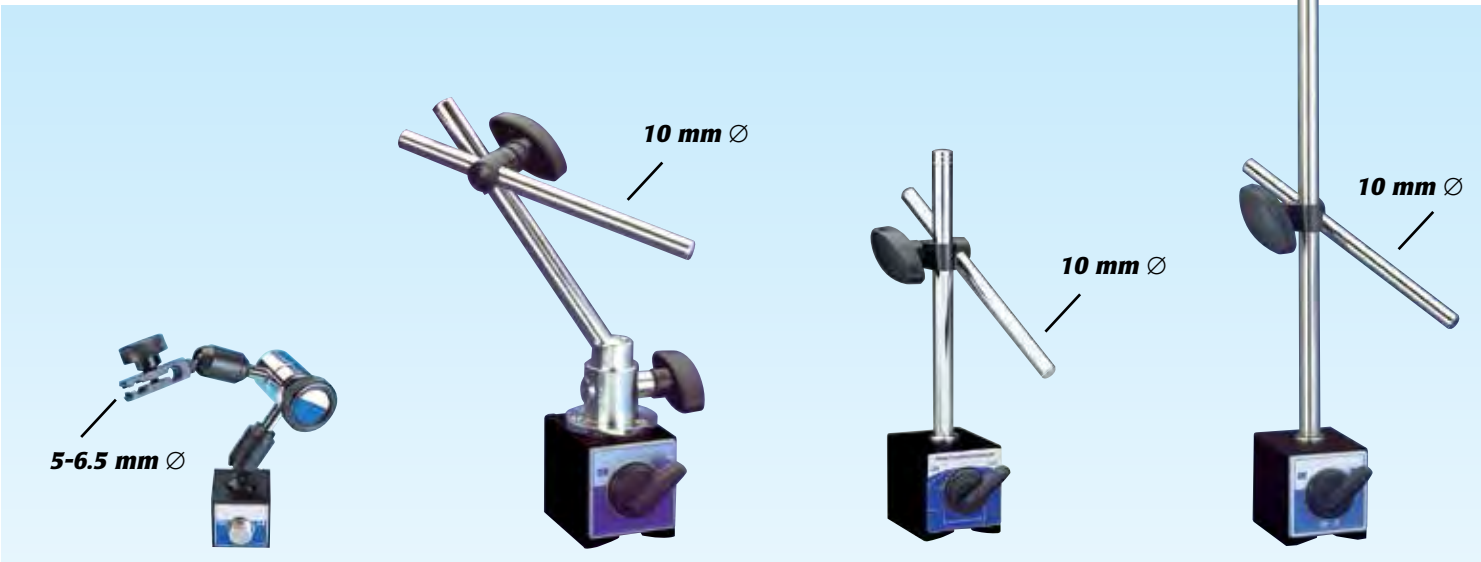

MB2

Mechanical clamping type tightens three joints simultaneously just by on-tough operation. Arm is freely adjustable without distortion. Equipped with fine adjuster and medium size magnet for stabilizing the base. Suitable for performing precision operation.

Magnetic Base:
30 (w) x 30 (l) x 30 (h) mm
(1.2 x 1.2 x 1.2 in.)

Vertical Holding Power:
17 kgf (37 lb force)

Arm:
L1: 46 mm (1.8 in.)
L2: 46 mm (1.8 in.)
L3: 39 mm (1.5 in.)

Clamp Hole:
Adjustable from 5 to 6.5 mm

Weight:
0.38 kg (0.83 lb)

MB2 Compact Magnetic Stand

M8

A ball joint at the base of the main post allows 360° rotation, offering considerable versatility. The second arm adopts angles up to 75°.

Magnetic Base:
50 (w) x 58 (l) x 55 (h) mm
(2.0 x 2.3 x 2.2 in.)

Vertical Holding Power:
80 kgf (176 lb force)

Main Pole:
diameter: 12 mm (0.47 in.)
length: 194 mm (7.6 in.)

Sub Pole:
diameter: 10 mm (0.39 in.)
length: 165 mm (6.5 in.)

Clamp Hole:
Adjustable from 4.5 mm to 6.5 mm

Weight:
1.8 kg (4 lb)

M8 Magnetic Stand

M1

A precision base providing stable support for such devices as electrodes and manipulators. Adjustable second arm adopts a variety of angles.

Base:
50 (w) x 58 (l) x 55 (h) mm
(2.0 x 2.3 x 2.2 in.)

Vertical Holding Power:
80 kgf (176 lb force)

Main Pole:
diameter: 12 mm (0.47 in.)
length: 176 mm (6.9 in.)

Sub Pole:
diameter: 10 mm (0.39 in.)
length: 165 mm (6.5 in.)

Clamp Hole:
diameter: 4.5 mm and 6.5 mm

Weight:
1.8 kg (4 lb)

M1 Magnetic Stand

M1L

Same base and support arm as M1, but equipped with a longer (14-inch) vertical post.

Base:
50 (w) x 58 (l) x 55 (h) mm
(2.0 x 2.3 x 2.2 in.)

Vertical Holding Power:
80 kgf (176 lb force)

Main Pole:
diameter: 12 mm (0.47 in.)
length: 356 mm (14 in.)

Sub Pole:
diameter: 10 mm (0.39 in.)
length: 165 mm (6.5 in.)

Clamp Hole:
diameter: 4.5 mm and 6.5 mm

Weight:
1.8 kg (4 lb)

M1L Magnetic Stand

Mounting your Micromanipulator

Three of the stands above — **M1**, **M1L**, and **M8** — have 10 mm diameter mounting rods. The standard mount on several WPI manipulators (**DC3001**, **KITE**, **M3301**, **MMJ**, and **MD4**) accommodates a 12 mm rod. In order to use one of these three stands, you will need to replace the manipulator's standard 12 mm mounting clamp with the optional M5 clamp.

M5 — *∅ 10 mm clamp*

M5 ∅ 10 mm Clamp

Magnetic Holding Devices

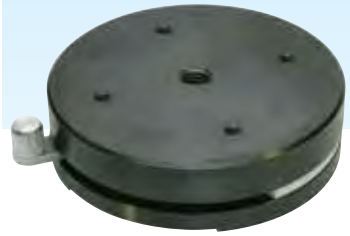

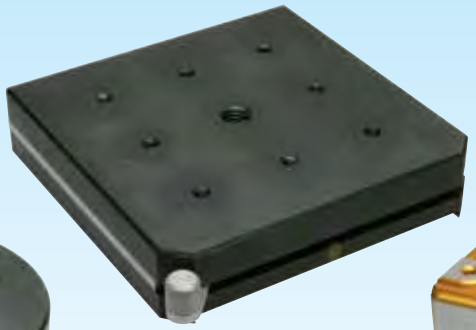

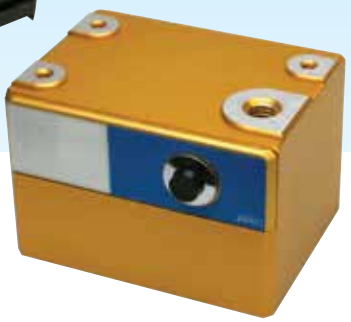

Round Base

An ideal accessory for optical tables and vibration-free platform. Reduces experimental set-up time by allowing free positioning and instant clamp down of optical components. Switchable ON/OFF magnetic circuit permits fine adjustment and precise positioning.

- Easy ON/OFF operation using lever
- Thin and powerful magnetic force
- Generous array of tap holes

Holding Power:
20 kgf (44 lb force)

Dimension:
75 (OD) x 20 (h) mm
2.9 (OD) x 0.8 (h) in.

Mounting Hole:
4-M4 x 0.7, depth 6mm *
M8 x 1, depth 6mm
Span 35mm

Weight:
0.7 kg (1.5 lb)

501651	Magnetic Base, 75mm diameter
503568	Magnetic Base, 50mm diameter

** Posts with M4-threads not available from WPI. See posts with M8 threads on page 142.*

Square Base

An ideal accessory for optical tables and vibration-free platform. Reduces experimental set-up time by allowing free positioning and instant clamp down of optical components. Switchable ON/OFF magnetic circuit permits fine adjustment and precise positioning.

- Easy ON/OFF operation using lever
- Thin and powerful magnetic force
- Generous array of tap holes

Holding Power:
20 kgf (44 lb force)

Dimension:
65 (w) x 65 (l) x 20 (h) mm
2.6 (w) x 2.6 (l) x 0.8 (h) in.

Mounting Hole:
8-M4 x 0.7, depth 6mm *
M8 x 1, depth 6mm
Span 25mm

Weight:
0.6 kg (1.3 lb)

501653	Magnetic Base, 65x65mm
503569	Magnetic Base, 45x45mm
503570	Magnetic Base, 90x90mm
503571	Magnetic Base, 120x120mm

** Posts with M4-threads not available from WPI. See posts with M8 threads on page 142.*

MOBITY

MOBITY™ is a new magnetic clamping system. With its ease of use, only one hand is needed to operate the attractive power. The MOBITY™ has a strong 88lbf pull, yet weighs only 1.5 lbs. MOBITY™ meets various applications with 4 tapped holes on the top surface. Requires (1) 9V alkaline battery (included).

Holding Power:
40 kgf (88 lb force)

Dimension:
55 (w) x 73 (l) x 50 (h) mm
2.2 (w) x 2.9 (l) x 2.0 (h) in.

Mounting Hole:
3-M4, depth 20mm *
M8, depth 15mm

Weight:
0.7 kg (1.5 lb)

501652	MOBITY Magnetic Clamping System

** Posts with M4-threads not available from WPI. See posts with M8 threads on page 142.*

M7

A small holder ideal for use where space is limited. Main post unscrews from base which may then be used alone as a switchable magnetic holder.

Magnetic Base:
30 (w) x 35 (l) x 35 (h) mm
1.2 (w) x 1.4 (l) x 1.4 (h) in.

Vertical Holding Power:
20 kgf (44 lb force)

Main Pole:
Diameter: 7mm (0.28 in.)
Length: 52mm (2 in.)

Clamp Hole:
Diameter: 6mm

Weight:
0.36 kg (0.8 lb)

M7	Compact Magnetic Stand

12"x24" Steel Base Plate #5479

8½"x12" Steel Base Plate #5052

BASE PLATES: A magnetic stand requires a steel mounting surface. WPI's steel base plates have plenty of mass to give stability to your experimental setup. Beveled edges make them easy to handle; rubber feet hold them off the benchtop, making them easier to grasp when moving; and the special black coating provides a durable protective finish.

ACCESSORIES

5052	Steel base plate, 8½ x 12 in. (10 lb)
5479	Steel base plate, 12 x 24 x ⅜-in. (32 lb)

Bench Top Vibration Isolation Platform

Simple Set-Up and Adjustment

Performance

- Horizontal frequencies are weight dependent.
- Horizontal frequency of 1.5 Hz is achieved at or near the upper limits of the payload range.
- At the lower limits of the payload range the horizontal frequency is approximately 2.5 Hz.
- Vertical frequency is tunable to 0.5 Hz throughout the payload range.

This bench top platform offers 10-100 times better performance than a full size air table in a package only 4.6 inches tall, and without air or electricity! This vibration isolation platform is extremely easy to use and offers extreme performance. It offers a 1.5 Hz horizontal natural frequency and 0.5 Hz vertical natural frequency. There are only two adjustments.

This is the thinnest, most portable, and most user-friendly isolator ever offered that is capable of delivering this level of performance.
Weight: Approximately 40 lb (16 kg)
Dimensions: 18" W x 20" D x 4.6" H (457 x 508 x 117 mm)

MK-BM-8100	Bench top Vibration Platform, 50-105lb payload weight range (23 - 48 kg)

Vibration-Free Tables

All buildings vibrate — activities of people, machinery, heating and ventilation systems, and nearby truck or rail traffic cause all types of vibrations. These vibrations, though acceptable to occupants, cannot be tolerated by equipment used in patch clamping, cell injection, analytical balances, and optical microscopes. The short-term effects of such vibrations include inconsistent and unreliable performance. The long-term effects are excessive wear, maintenance, and fatigue failures. In order to protect sensitive instruments and equipment from faulty operation or failure, vibration must be significantly reduced. This can be efficiently accomplished by using Vibration-Free Platforms and Vibration-Free Workstations.

Vibration-Free Workstation

- **Vertical and horizontal vibration isolation**
- **High performance Active-Air Suspension**
- **Automatic leveling**
- **VibraDamped Steel**
- **Class 100 Cleanroom compatible**
- **Leveling feet**

Additional tabletop sizes and finishes are available, as well as optional accessories such as side rails and casters.

Call for more information and prices for the configuration you require.

For more information, see
www.wpiinc.com/vfw